REPLAY MOUNTAIN

LA REPLAY MOUNTAIN RESISTE ALLE BASSE TEMPERATURE FINO A -20°C, MA ANCHE A QUELLE ELEVATE FINO A +50°C. LE INSTALLAZIONI PIU' INDICATE SONO IN QUEI POSTI DOVE POSSONO VERIFICARSI PICCHI SIA DI BASSE CHE DI ALTE TEMPERATURE, COME AD ESEMPIO IN LUOGHI DI MONTAGNA.

CARATTERISTICHE PRINCIPALI:

- Temperatura di funzionamento +50°/-20°C
- Ampia gamma da 300 a 1200 lumen
- Grado di protezione IP65

REPLAY MOUNTAIN

Fabbricazione elettronica italiana al 100%
100% Italian electronics manufacturing

Alimentazione 230Vca -50Hz
230Vca -50Hz input Power

Grado di protezione IP65
IP65 protection degree

Grado di resistenza agli urti IK08
IK08 shock resistance degree

Materiale corpo in Bayblend® (PC+ABS) autoestinguente V0
Self-extinguishing (V0) Bayblend® (PC+ABS) body material

Materiale diffusore in policarbonato cristallo autoestinguente V0
Self-extinguishing (V0) crystal polycarbonate reflector material

Temperatura operativa -20°C / +50°C
-20°C / +50°C working temperature

Glow wire test 960°C (2.0mm)
960°C (2.0mm) glow wire test

Tipo di funzionamento S.E. o S.E./S.A.
NOT PERMANENT or PERMANENT functioning

Autonomia 90 o 180 minuti
90 or 180 minutes autonomy

Tempo di ricarica 12 ore
12 hours recharging time

Montaggio a parete o ad incasso tramite WALLBOX 01 (cod.07742)
Wall mounting or recessed wall mounting by WALLBOX 01 (cod.07742)

Batteria Ni-MH ricaricabile, garantita 4 anni
Rechargeable Ni-MH battery, 4 years warranty

Ricarica della batteria a corrente costante
Battery recharging at constant rated current

Protezione della batteria a scarica completa
Battery protection at full discharging

LED verde spia presenza rete
Green LED power ON

Fonte luminosa LED Alta efficienza
High efficiency LED Light source

Gamma flusso luminoso nominale da 300 a 1200 Lumen
Luminous flux range from 300 to 1500 Lumen

Resa cromatica (CRI) 80
80 colour rendering index

Temperatura colore 5000K
5000K colour temperature

Zero rischio fotobiologico secondo EN62471
Photobiological no-risk according to EN62471

Garanzia sulla fonte luminosa LED di 10 anni
10 years warranty on LED light source

Conforme alle normative vigenti:
Complies with current Standards:

• EN 61547 • EN 1838 • EN 60598-2-22 • EN 62471 • EN 55015, Classe B
• EN 60598-1 • EN 61347-2-7 • EN 62034 (Autotesting Version)

Dimensioni
Dimension

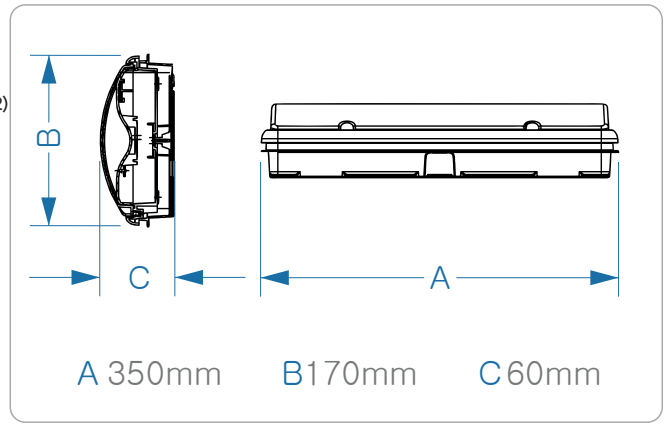

Diagramma polare
Polar diagram

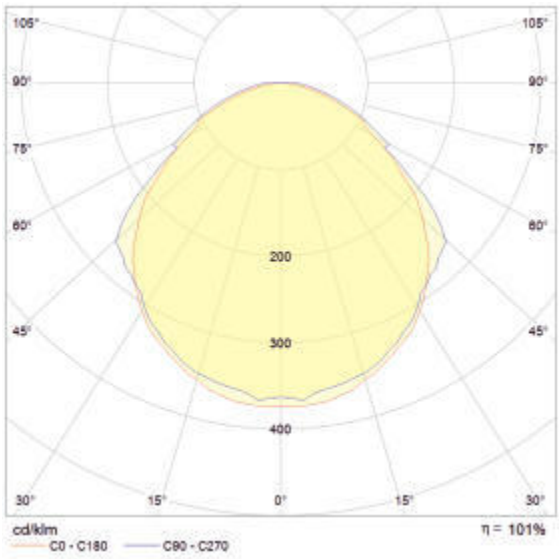

REPLAY MOUNTAIN - STANDARD S.E. IP65							
CODICE	ARTICOLO	LUMEN S.E.		AUTONOMIA	BATTERIA	TEMPO DI RICARICA	MODO
16501	MNR300NM15SE65	300		90 min	Ni-Mh	12 h	S.E.
16502	MNR300NM30SE65	300		180 min	Ni-Mh	12 h	S.E.
16503	MNR600NM15SE65	600		90 min	Ni-Mh	12 h	S.E.
16504	MNR600NM30SE65	600		180 min	Ni-Mh	12 h	S.E.
16505	MNR1000NM15SE65	1000		90 min	Ni-Mh	12 h	S.E.
16506	MNR1000NM20SE65	1000		120 min	Ni-Mh	12 h	S.E.
61640	MNR1200NM15SE65	1200		90 min	Ni-Mh	12 h	S.E.
61641	MNR1200NM20SE65	1200		120 min	Ni-Mh	12 h	S.E.
REPLAY MOUNTAIN - STANDARD S.E./S.A. IP65							
CODICE	ARTICOLO	LUMEN S.E.	LUMEN S.A.	AUTONOMIA	BATTERIA	TEMPO DI RICARICA	MODO
16601	MNR300NM15SESA65	300	300	90 min	Ni-Mh	12 h	S.E./S.A.
16602	MNR300NM30SESA65	300	300	180 min	Ni-Mh	12 h	S.E./S.A.
16603	MNR600NM15SESA65	600	600	90 min	Ni-Mh	12 h	S.E./S.A.
16604	MNR600NM30SESA65	600	600	180 min	Ni-Mh	12 h	S.E./S.A.
16605	MNR1000NM15SESA65	1000	1000	90 min	Ni-Mh	12 h	S.E./S.A.
16606	MNR1000NM20SESA65	1000	1000	120 min	Ni-Mh	12 h	S.E./S.A.
61642	MNR1200NM15SESA65	1200	1000	90 min	Ni-Mh	12 h	S.E./S.A.
61643	MNR1200NM20SESA65	1200	1000	120 min	Ni-Mh	12 h	S.E./S.A.
REPLAY MOUNTAIN - AUTOTESTING S.E. IP65							
CODICE	ARTICOLO	LUMEN S.E.		AUTONOMIA	BATTERIA	TEMPO DI RICARICA	MODO
17001	MNT300NM15SE65	300		90 min	Ni-Mh	12 h	S.E.
17002	MNT300NM30SE65	300		180 min	Ni-Mh	12 h	S.E.
17003	MNT600NM15SE65	600		90 min	Ni-Mh	12 h	S.E.
17004	MNT600NM30SE65	600		180 min	Ni-Mh	12 h	S.E.
17005	MNT1000NM15SE65	1000		90 min	Ni-Mh	12 h	S.E.
17006	MNT1000NM20SE65	1000		120 min	Ni-Mh	12 h	S.E.
61644	MNT1200NM15SE65	1200		90 min	Ni-Mh	12 h	S.E.
61645	MNT1200NM20SE65	1200		120 min	Ni-Mh	12 h	S.E.
REPLAY MOUNTAIN - AUTOTESTING S.E./S.A. IP65							
CODICE	ARTICOLO	LUMEN S.E.	LUMEN S.A.	AUTONOMIA	BATTERIA	TEMPO DI RICARICA	MODO
17021	MNT300NM15SESA65	300	300	90 min	Ni-Mh	12 h	S.E./S.A.
17022	MNT300NM30SESA65	300	300	180 min	Ni-Mh	12 h	S.E./S.A.
17023	MNT600NM15SESA65	600	600	90 min	Ni-Mh	12 h	S.E./S.A.
17024	MNT600NM30SESA65	600	600	180 min	Ni-Mh	12 h	S.E./S.A.
17025	MNT1000NM15SESA65	1000	1000	90 min	Ni-Mh	12 h	S.E./S.A.
17026	MNT1000NM20SESA65	1000	1000	120 min	Ni-Mh	12 h	S.E./S.A.
61646	MNT1200NM15SESA65	1200	1000	90 min	Ni-Mh	12 h	S.E./S.A.
61647	MNT1200NM20SESA65	1200	1000	120 min	Ni-Mh	12 h	S.E./S.A.
REPLAY MOUNTAIN - CENTRAL SYSTEM S.E. IP65							
CODICE	ARTICOLO	LUMEN S.E.		AUTONOMIA	BATTERIA	TEMPO DI RICARICA	MODO
16701	MNC300NM15SE65	300		90 min	Ni-Mh	12 h	S.E.
16702	MNC300NM30SE65	300		180 min	Ni-Mh	12 h	S.E.
16703	MNC600NM15SE65	600		90 min	Ni-Mh	12 h	S.E.
16704	MNC600NM30SE65	600		180 min	Ni-Mh	12 h	S.E.
16705	MNC1000NM15SE65	1000		90 min	Ni-Mh	12 h	S.E.
16706	MNC1000NM20SE65	1000		120 min	Ni-Mh	12 h	S.E.
61648	MNC1200NM15SE65	1200		90 min	Ni-Mh	12 h	S.E.
61649	MNC1200NM20SE65	1200		120 min	Ni-Mh	12 h	S.E.
REPLAY MOUNTAIN - CENTRAL SYSTEM S.E./S.A. IP65							
CODICE	ARTICOLO	LUMEN S.E.	LUMEN S.A.	AUTONOMIA	BATTERIA	TEMPO DI RICARICA	MODO
16812	MNC300NM15SESA65	300	300	90 min	Ni-Mh	12 h	S.E./S.A.
16813	MNC300NM30SESA65	300	300	180 min	Ni-Mh	12 h	S.E./S.A.
16814	MNC600NM15SESA65	600	600	90 min	Ni-Mh	12 h	S.E./S.A.
16815	MNC600NM30SESA65	600	600	180 min	Ni-Mh	12 h	S.E./S.A.
16816	MNC1000NM15SESA65	1000	1000	90 min	Ni-Mh	12 h	S.E./S.A.
16817	MNC1000NM20SESA65	1000	1000	120 min	Ni-Mh	12 h	S.E./S.A.
61650	MNC1200NM15SESA65	1200	1000	90 min	Ni-Mh	12 h	S.E./S.A.
61651	MNC1200NM20SESA65	1200	1000	120 min	Ni-Mh	12 h	S.E./S.A.
REPLAY MOUNTAIN - S.O.S. GROUND SYSTEM IP65							
CODICE	ARTICOLO	LUMEN		ALIMENTAZIONE			
16901	MNSOS300-230-65	300		230V			
16902	MNSOS600-230-65	600		230V			
16903	MNSOS1000-230-65	1000		230V			
61652	MNSOS1200-230-65	1200		230V			
REPLAY MOUNTAIN - S.O.S. SYSTEM 24V IP65							
CODICE	ARTICOLO	LUMEN		ALIMENTAZIONE			
16911	MNSOS300-24-65	300		24V			
16912	MNSOS600-24-65	600		24V			
16913	MNSOS1000-24-65	1000		24V			
61653	MNSOS1200-24-65	1200		24V			
REPLAY MOUNTAIN - S.O.S. SYSTEM 48V IP65							
CODICE	ARTICOLO	LUMEN		ALIMENTAZIONE			
16921	MNSOS300-48-65	300		48V			
16922	MNSOS600-48-65	600		48V			
16923	MNSOS1000-48-65	1000		48V			
61654	MNSOS1200-48-65	1200		48V			

REPLAY MOUNTAIN - SOLOLUCE 12-24V IP65							
CODICE	ARTICOLO	LUMEN		ALIMENTAZIONE			
18730	MNSL300-12-24-65	300		12-24V			
18731	MNSL600-12-24-65	600		12-24V			
18732	MNSL1000-12-24-65	1000		12-24V			
61655	MNSL1200-12-24-65	1200		12-24V			
REPLAY MOUNTAIN - SOLOLUCE 230V IP65							
CODICE	ARTICOLO	LUMEN		ALIMENTAZIONE			
18740	MNSL300-230-65	300		230			
18741	MNSL600-230-65	600		230			
18742	MNSL1000-230-65	1000		230			
61656	MNSL1200-230-65	1200		230			